Code : **40D-2 25-- A**
Oblong Suction Cup Series 4, 22,8x14.6mm

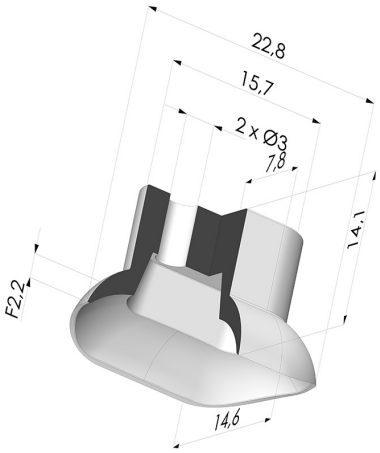

TECHNICAL INFORMATION

Arrow :	2.2 mm
Category :	Oblong
Height (in mm) :	14.1
Horizontal force :	13 N
inner barrel diameter :	2x3 mm
Length :	22.8 mm
Mass :	1.2 g
Number of bellows :	0.5 Bellows
Range :	Suction cup
Series :	4
Shape :	Oblong
Vertical force :	6.5 N
Volume :	1.13 cm³
Width :	14.6 mm

Variants:

Variant reference:
40D-2 25NI A

- Color: Black
- Matter: Nitrile

Related products:

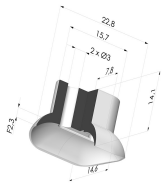

Oblong Suction Cup Series 4, 22,8x14.6mm
Product reference: 40D 25-- A

E-mail: info@novacom-grp.com
Z.A. de Sars et Rosières - 30, rue de l'épau - 59230 ROSULT - France
Phone. : +33 (0)3 27 30 53 53
VAT Number : FR57 381 120 4840